TECHNICAL REPORT ON THE DESIGN OF THE IMPACT STONE CRUSHER

BY

ADETOLA, ADEDAMOLA AYOMIDE

125/19/1/0137

SUBMITTED TO THE DEPARTMENT OF MECHANICAL ENGINEERING

FIRST TECHNICAL UNIVERSITY IBADAN, OYO STATE

DEPARTMENT OF MECHANICAL & MECHATRONICS ENGINEERING

IN PARTIAL FULFILMENT FOR THE AWARD OF A BACHELOR OF ENGINEERING

(B. Eng) IN MECHANICAL ENGINEERING,

FIRST TECHNICAL UNIVERSITY, IBADAN, OYO STATE, NIGERIA.

JULY, 2024

ACKNOWLEDGEMENT

I want to thank Professor Mudashiru for giving us this opportunity to present such work. My thanks go to Ifeade Adejayan and Olawoyin Olamide for their support in the completion of the project. I also want to thank my Parents and siblings for their emotional, physical and financial support as well.

Above all I thank God Almighty.

ABSTRACT

Crushers are one of the main equipment used for reducing size in metallurgical, mechanical, and other similar industries. They exist in various sizes and capacities which range from 30 tons/hr. to 1000 tons/hr. They can be classified based on the degree to which they can fragment the starting material and the way they apply forces. Based on the mechanism used crushers are basically of three types; namely, Cone crusher, Jaw crusher, and Impact Crusher. The main objective is to design impact stone crusher. Impact stone crusher involves the use of impact rather than pressure to crush materials. The material is held within a cage, with openings of the desired size at the bottom, end or at sides to allow crushed material to escape through them. Impact stone crusher is used with soft materials, medium to hard stones and medium hard metallic ores. The principles used for impact loading is the time for the natural frequency of the body is much greater than with the time for applying force on materials. Since the hammer is rotating at a very high speed, the time for which the particles come in contact with the hammer is very small, hence impact loading is applied. The shaft is considered to be subjected to torsion and bending.

CHAPTER 1

1.0 INTRODUCTION

In industry, crushers are machines that use a meta surface to break or compress materials into small fractional denser masses. Throughout most of industrial history, the greater part of the crushing and mining part of the process occurred under muscle power as the application of force concentrated in the tip of the miners pick or sledgehammer-driven drill bit. Different mechanisms for reducing the size by hand and hammer, steam shovels, etc. were popular. In the mid-19th century, an explosive was widely used in the bulk mining industry. The gradual coming of that era and displacement of the cottage industry-based economies was itself accelerated first by the utility of wrought and cast iron. From charcoal for the production of the newfangled window glass material that had become along with the chimney 'all the rage' among the growing middle-class and affluence of the sixteenth and seventeenth centuries; and as always, the charcoal needed to smelt metals, especially to produce ever larger amounts of brass and bronze, pig iron, cast iron and wrought iron demanded by the new consumer classes. Other metallurgical developments such as silver and gold mining mirrored the practices and developments of the bulk material handling methods and technologies feeding the burgeoning appetite for more and more iron and glass, both of which were rare in personal possessions until the 1700s. With gunpowder being increasingly applied to mining, rock chunks from a mining face became much larger, and the blast dependent mining itself had become dependent upon an organized group, not just an individual swinging a pick. Economies of skill gradually infused industrial enterprises, while transport became a key bottleneck as the volume of moving materials continued to increase following demand. This spurred numerous canal projects, inspired laying first wooden, then iron protected rails using draft animals to pull loads in the emerging bulk goods transportation-dependent economy. In the coal industry, which grew up hand in hand as the preferred fuel for smelting ores, crushing and preparation (cleaning) was performed for over a hundred years in coal breakers, massive noisy buildings full of conveyors, belt-powered trip hammer crushing stages and giant metal grading/sorting grates. Impact Crusher features many advantages: a new technique, unique structure, cubic shaped desired products. Impact Crusher can deal with materials with a feeding size less than 500 mm and compressive resistance not more than 500 MPa despite the large, middle or small size hard. This machine is widely used in mining, highway and railway, construction material and other related industries. The final size can adjust and there are many models for the crushers. At present, Nigeria’s economic construction and rapid development enhance the need for the gravel and aggregate for the construction site. The normal weight coarse aggregates for the Ethiopian construction sector are produced by both, traditional and modern means.

Traditionally coarse aggregate is produced by heating a stone at a higher temperature and crushing it by a hammer using manual labour to the required approximate sizes.

Aggregates produced using such method are usually flaky (peeling) and do not satisfy the grading requirements set by standard recommendations. Nevertheless, such aggregates are used for construction in areas where aggregates crushing machine(s) is not available and quality control is not a criterion in the execution of the work. In preparing to crush it manually by a hammer which consumes a long time, takes maximum money, need many human powers and has many injuries on a human body. So, the design of this machine is necessary.

Fig. 1. A man crushing stone manually

Construction is clearly a critical enabling condition for improving living conditions in both rural and urban areas. This is achieved if and only if the stone crusher which will fill the demand of aggregates is designed. So, the design of this machine will intend to fill this demand. So, our main objective of the project is to design the impact stone crusher.

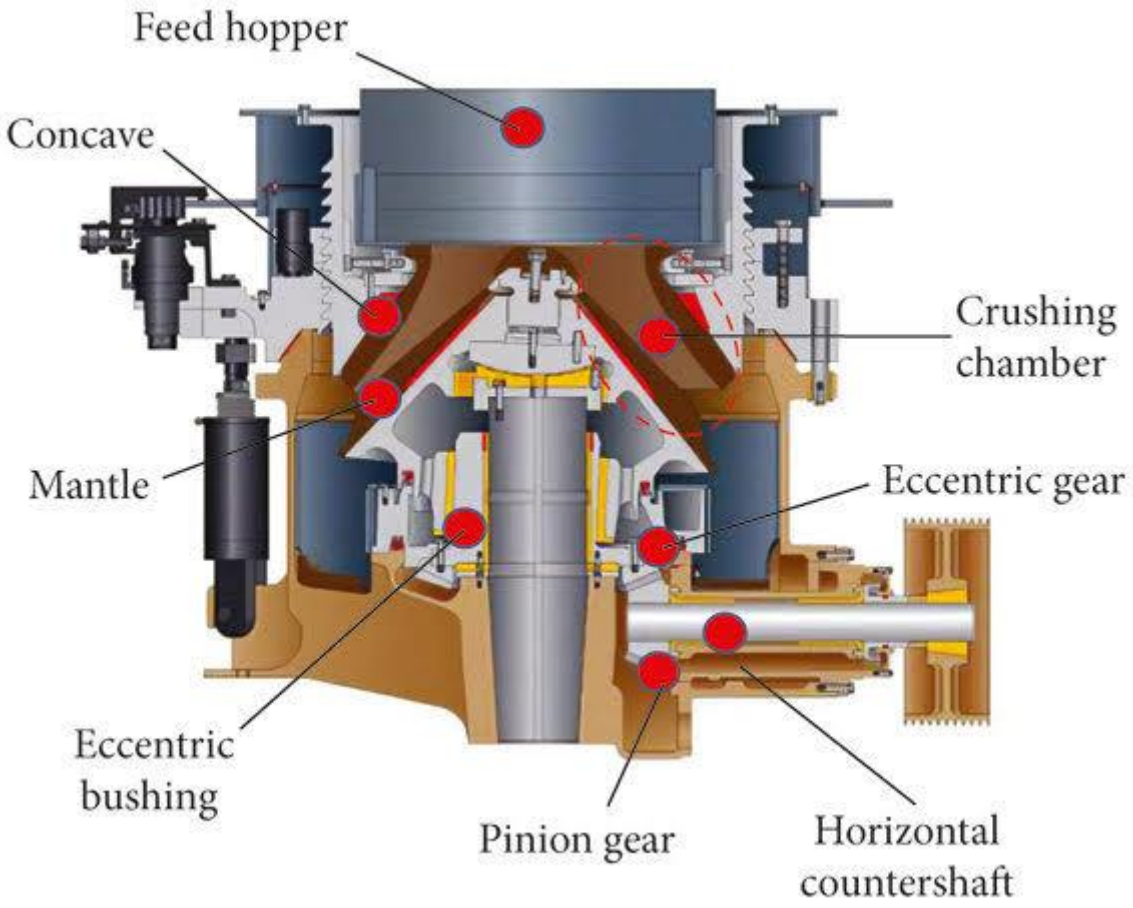

Fig. 2. Parts of a Crusher

CHAPTER 2

2.0 Design Methodology

Defining the problem and gathering information regarding the crushing machine. Surveying different literature (journals and books) about the stone crusher machine.

Fig 3. Design Methodology

2.1 Concept Generation

Developing different concept on how to design the machine regarding the appearance, capacity, overall dimension, etc. Selecting the concept and reviewing the design.

2.2 Embodiment design

Configuration design of parts and components Parametric design of parts.

2.3 Detail design

In the detail design phase, the following activities are completed:

- Detailed engineering drawings suitable for manufacturing including two and three-dimensional drawing using SolidWorks.
- Assembly drawings and its instructions also are completed.
- Finally, detail design concludes with a design review.

CHAPTER 3

3.0 LITERATURE REVIEW

A crusher is a machine that is designed to reduce large solid masses of raw material into smaller portions. Crushing is the process of transferring a force amplified by mechanical advantage through a material made of molecules that bond together more strongly, and resist deformation more than those in the material being cru1shed do. Crushing devices hold material between two parallel or tangent solid surfaces and apply sufficient force to bring the surfaces together to generate enough energy within the material being crushed.

3.1 Types of crusher

Various types of crushers are used in the stone crushing industry such as Jaw Crushers, Roller Crushers, Cone Crushers, Impactor, Rotopoctor, etc. Generally, only Jaw crushers are used as Primary crushers. For secondary and tertiary crushing application either of Jaw, cone, roller, Impactor or Rotopoctor type crushers are used. Various types of crushers are briefly described below:

Jaw crusher

These are the oldest type of and the most commonly used crushers in use and have changed little from the original design. In Jaw Crusher the feed is compressed between a stationary and a movable surface. A few of common types of Jaw crushers, in use, are described below:

- Double toggle jaw crusher
- Single toggle jaw crusher
- Impact jaw crusher

Gyratory (cone) crusher

In Gyratory Crushers the stress to the feed is applied between a stationary and a movable surface. The crushing head is employed in the form of a truncated cone, mounted on a shaft, the upper end of which is held in a flexible bearing, whilst the lower end is driven eccentrically so as to describe a circle. The crushing action takes place around the cone. Examples are:

- Primary Gyratory Crusher
- Cone Crusher

Roller crusher

The roller crushers operate on the principle that the stress (to the feed) is applied between the rollers or between a roller and a crushing surface.

- Double Roll Crusher
- Single-Roll Crusher
- Hammer Crusher
- Impactor/Impact Breakers
- Rotopoctor

3.2 Classification of crusher

A crusher can be classified depending on the size reduction factor as follows:

Primary crusher

The raw material from mines is processed first in primary crushers. The input of these crushers is relatively wider and the output products are coarser in size.

Secondary crusher

The crushed rocks from primary crusher are sent to these secondary crushers for further size reduction.

Fine crusher

Fine crushers have relatively small openings and are used to crush into a more uniform and finer product.

3.3 Types of impact stone crusher

An impact stone crusher can be further classified as Horizontal shaft impact stone crusher and vertical shaft impact stone crusher based on the type of arrangement of the impact rotor and shaft.

a) Horizontal shaft impact stone crusher
b) Vertical shaft impact stone crusher

3.4 Advantages of the horizontal over vertical shaft impact stone crusher

- Maintain a more constant gradation and greater top size control.
- Less capital outlay.
- The high degree of product size control
- Long life of wear components.
- Large feed port, deep crushing chamber, high reduction ratio (20:1)
- Easy operation and maintenance

3.5 Locally available types of stone

The most commonly available local coarse aggregates are obtained from normal weight crushed basaltic stone and lightweight volcanic ash, which are a member of a family of igneous rock (scoria or pumice). Namely; Basalt, Pumice, and Scoria (red ash).

CHAPTER 4

MATHEMATICAL MODELING

4.1 Law of conservation of moments to impact

The application of the law of conservation of momentum is helpful in impact. It can generalize some of the overall effects of the process. Let consider a stationary object of mass m1 (mass of the stone), which is struck by another object of mass m2 (mass of the rotating hammer) initially moving at a velocity of u2, and consider that the two masses remain together after impact and move together after impact at a velocity of V2. Then from conservation of momentum,

$$m_1u_1 + m_2u_2 = (m_1 + m_2)V$$

The initial velocity of the hammer and the number of impacts will be calculated.

Let KE1 is equal to the initial kinetic energy before impact and KE2 is equal to the kinetic energy of the combined mass after impact, then

$$\frac{KE_2}{KE_1} = \frac{m_2}{m_1+m_2}$$

The application of the law of conservation of momentum to two objects colliding is quite straightforward since the problem is concerned with the effects after impact, however, in crushing process the system may change drastically if fracture takes place during impact. The impact process is not instantaneous and during the process rotational kinetic energy of the impacting changes to strain energy, the kinetic energy of vibration of the hammer and stone masses as well as to other forms of energy. In this case, it is difficult to determine the distribution of initial kinetic energy to the elemental parts of the system and consequently difficult to determine the loss of initial kinetic energy to other forms of energy. As a general rule, however, the case of crushing may be considered analogous to the case forging in that light hammers at high velocities would be advantageous. An objection may be raised to the above rule in that, in crushing devices where the impact is employed, the impacting medium will lose all its kinetic energy either by a single impact or a number of further impacts and so nothing would be gained by adjustment of the weights of the impacting masses. The main object, however, is to cause fracture and unless the impacts raise the strain energy of the impacted material above a certain level, the energy input is lost in the form of heat and does not contribute to the crushing process. If the fracture is to be obtained by the impact it is desirable for the impacting masses to lose as much kinetic energy as possible during a single impact so that a maximum amount of energy would be available for fracture.

4.2 Static stresses and displacement

Under the static condition the stress values arising from impact and since the strain energy density in the impacted object would, in general not constant throughout; the stress condition would be a better criterion for predicting fracture than the total strain energy of the masses. In static loading, any change in applied force is so low compared to the velocity of stress propagation of that the specimen may be considered to read just instantaneously at all points under the change in loading. An analysis of the crack propagation equation illustrates the effect of cracking and shows how the crack propagation velocities are dependent on the physical characteristics of the material through which the crack is transmitted. The velocity of the crack propagation can be found by applying the equation of momentum. Thus, the velocity of crack propagation is dependent only on the characteristics of the material and is independent of the applied load or force.

4.3 Kinetics: Rotation of the rotor assembly

Considering the assembly of the rotor only for a single particle of input product and hammer, the following mathematical simulations are derived.

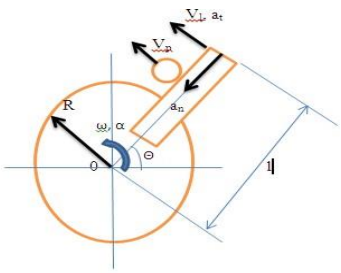

Fig. 3. A rotor bar of a hammer crusher

When a rotor assembly (rigid body) rotates about a fixed axis, all points other than those on the axis moves in a concentric circle about the fixed axis. Thus, for the rigid body rotating about a fixed axis normal to the plane of the Fig. 3 through O any point such as point A move in a circle of radius *l*.

4.4 Kinematics: Energy loss during impact

Impact phenomenon is almost always accompanied by energy loss, which may be calculated by subtracting the kinetic energy of the system just after impact from that just before impact. Energy is lost through the generation of heat during the localized inelastic deformation of the material, through the generation and dissipation of elastic stresses waves within the bodies, and through the generation sound energy.

The Basic Assumptions made here are:

- Rotor mass is much greater than the mass of single particles in the feed.
- Before impact, the linear velocity of the crushing bar is much more important than the particle velocity. For the particle, it will be determined form free falling at some height.
- It is also assumed that most particles enter into the collision with the rotor bars in the median region of their impact areas with the hammer.

The final kinetic energy of the system is,

$$KE_f = ((m_1 + m_2)\, v^2)/2$$

The energy loss will be given as, crushing effect derived from subtracting the initial from the final Kinetic Energy;

$$\Delta KE = KE_f - KE_i$$

The intensity of dynamic stress induced by the rotor and by the impact into the fixed surface i.e. the breaking bars/wall can be calculated as;

$$\sigma_d = \rho V_p u_2$$

The dynamic crushing force (centrifugal force developed) required to crush the basalt can be found by considering the weight of the input product and initial velocity of the particle.

$$F_c = Wu_2^2/lg \quad \& \quad T = F_c x l$$

CHAPTER 5

DETAIL DESIGN

The initial design consideration is given as:

- The capacity of the feed rate =180 tons/hr(50kg/s)
- Input product specification=basalt, pumice, and scoria
- Number of hammers = 4
- Product output size = up to 40 mm
- Top feed size = 500x1000 mm^2
- Falling distance of particle =600mm
- Assume the mass of hammer is greater than (>>) mass of the particle ($10m_1 = m_2$)
- Revolution = 300 rpm
- Volume of particle = 2.7x10-5 m^3

Tonnage per impact is given by:

$$W = \frac{\dot{m}_1 g}{3600 \text{ x } n_i} \quad \frac{180 \text{ x } 1000 \text{ x } 9.8}{3600 \text{ x } 5} = 81.67N$$

The initial velocity of the particle would be found from;

$$u_2 = \frac{0.4m}{60} \text{ x } 2\pi \text{ x } 300rpm = 12.56m/s$$

The kinetic energy of the system before impact and after impact will be given as;

$$KE_i \quad \frac{1}{2} \quad {}^2 + \quad = m_1 u_1 \quad — \quad 10\ m_1 u_2^2 = 39.73KJ$$

$$2$$

$$KE_f = \frac{11}{2} m_1 V^2 = 37.84KJ$$

$$\Delta KE = KE_f - KE_i = -1.89KJ$$

Crack propagation velocity is given by;

$$V_p = \rho = \frac{Eg}{} \quad \frac{67.57Gpax9.8Kgm/s^2}{1{,}600kg/m^3} = 20{,}343.7m/s$$

The dynamic stress will be given as;

$$\sigma dy = \rho Vpu2$$

= (1,600kg/m^2x20,343.7m/s) x (12.56m/s)

σdy = 408.83Mpa

F_c = 81.67N x $(12.56m/s)^2$/ 0.4mx9.8m/s^2 ≅ 3,286.66N

The torque required will be given by;

T = F_c x l = 3,286.66N x 0.4m = 1,314.66 Nm

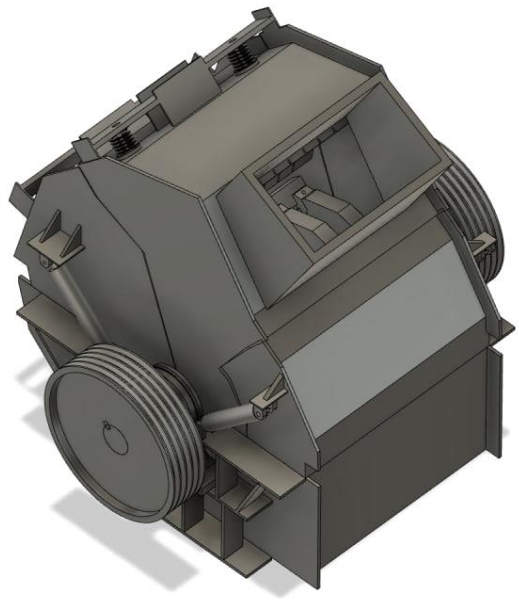

Fig. 4. 3D Model of a Crusher using Autodesk Fusion

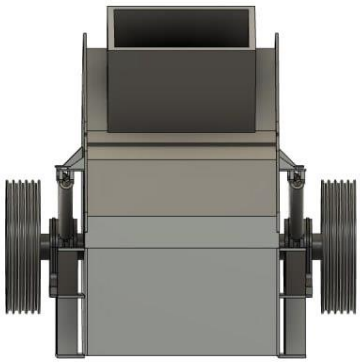

Fig. 5. Front View of the Crusher

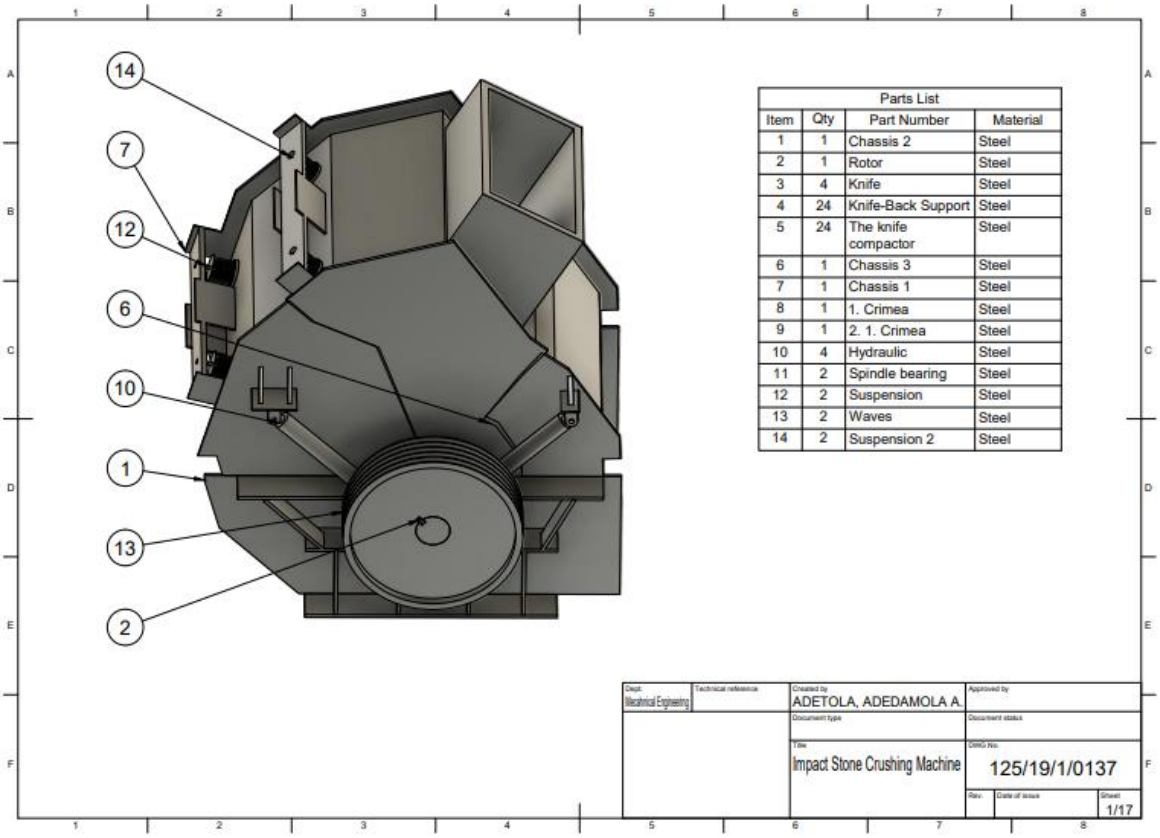

Fig. 6. Sectional View with its part list using Autodesk Fusion

Table 1: Bill of Material

Level	Part Number	Part Name	Quantity	Material Name
1	1	sekonder impact crusher	1	Steel
1.1	2	hydraulic	4	Steel
1.1.1	3	hydraulic 2	1	Steel
1.1.2	4	hydraulic 1	1	Steel
1.2	5	Knife-Back Support	24	Steel
1.3	6	Spindle bearing	2	Steel
1.4	7	The knife compactor	24	Steel
1.5	8	Chassis 3	1	Steel
1.6	9	Suspension	2	Steel
1.7	10	knife	4	Steel
1.8	11	Chassis 2	1	Steel
1.9	12	Suspension 2	2	Steel
1.10	13	Chassis 1	1	Steel
1.11	14	2. 1. Crimea	1	Steel
1.12	15	rotor	1	Steel
1.13	16	Waves	2	Steel
1.14	17	1. Crimea	1	Steel

CHAPTER 6

6.0 Design for Manufacturing

The fundamental idea of manufacturing or production is to create, (or produce), something that has a useful form. This form is most likely predetermined and calculated, with a certain physical geometry. Usually, this geometry has certain tolerances that it must meet in order to be considered acceptable. Tolerance outlines the geometric accuracy that must be achieved in the manufacturing process [9]. The "tightness" of the tolerances, or in other words the allowed variance between the manufactured product and the ideal product, is a function of the particular application of the product.

6.1 Goals and Core Principles for All Processes

- Meeting performance requirements
- Meeting cost of production requirements
- Ability to reproduce constant quality during mass production Large manufactured components should have uniform material properties

6.2 Manufacturing process by casting

Casting manufacturing process will be carried for the following parts: Anvils hammer, Rotor plate, Flywheel, and Pulley. The manufacturing of hammer involves two processes, namely machining for the rotating hammer and casting for the stationary hammer or anvils assembly. Casting is a manufacturing process by which a liquid material is usually poured into a mold, which contains a hollow cavity of the desired shape, and then allowed to solidify. The solidified part is also known as a casting, which is ejected or broken out of the mold to complete the process. Sand casting is the most widely used metal casting process in manufacturing and hammer for the anvils will be manufactured by casting. Anvils hammer, rotor plate, and pulley involve casting by the sand method.

Table 2: The weight of Parts Manufactured by casting

No.	Part name	Qty.	Weight/item	Total weight
1	Anvils hammer	28	954.58 g	26.73kg
2	Rotor plate	5	77175.80 g	385.88kg
3	Flywheel	1	21992.84 g	21.99kg
4	Pulley	1	2788.25 g	2.788kg
5	Small pulley	1	451.05 g	0.451kg
6	Rotating hammer	4	86371.63 g	345.48kg

CHAPTER 7

CONCLUSION

Crushers are major size reduction equipment used in mechanical, metallurgical and allied industries. Impact crushers are the latest breed of crushers in use. They have proved to be more efficient than the other two major types of crushers and are rapidly replacing them.

Portable and small size impact stone crusher machine is designed by applying knowledge of mathematical modeling, material selection, detail design, and stress analysis and also design for manufacturing are done. Finite element analysis is carried out (Appendix-A) to validate the theoretical analysis for the detail design and the CAD geometry is modeled in SolidWorks. The designed crusher has the ability to crush at different sizes used for a secondary crushing mechanism with moderate operating condition and it has a capacity of 180 tons/hr.

REFERENCES

[1] W. D. Callister, Fundamentals of Materials Science and Engineering, 5th ed. New York: John Wiley & Sons, Inc., 2001.

[2] F. S. Merritt, Building design and construction handbook 6th ed. New Jersey Columbus: McGraw-Hill, 2000.

[3] A. Dinku, "The need for standardization of aggregates for concrete production in the Ethiopian construction industry”," Master of Science Civil Engineering AAU, Ethiopia, 2010.

[4] R. S. Khurmi and J.K. Gupta, Machine Design 14th ed. USA, 2005.

[5] D.G. Ullman, The Mechanical Design Process, 2nd ed. USA: McGraw-Hill, 1997.

[6] G. Deepak, "Thesis on horizontal shaft impact crusher," Mechanical Engineering, India, 2007.

[7] J. Richard, "Thesis on impact studies on fixed end rods," Mechanical Engineering University of British Columbia, 1985.

[8] S.R. Singresu, Mechanical Vibration 5th ed. New York, USA, 2010.

[9] P. Mikell, Fundamental modern manufacturing, 4th ed. USA: Thomson digital printer, 2010.

[10] S. Timoshenko and D.H. Young, Elements of Strength of Materials.

[11] P. Ferdinand, Mechanics of materials, 6th Edition USA.